Conveyor 22®
Clean Electrical Engineering

Made in Sweden

Dimensions and Hole Pattern Drawing
Black Line 121 and Clean Line 121

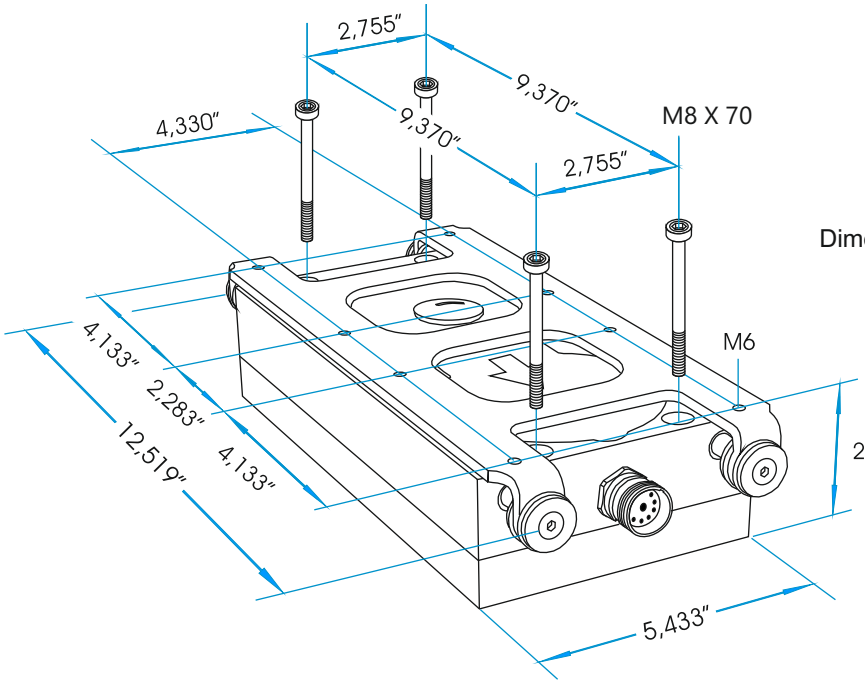

Dimensions in inches

Dimensions in millimeters

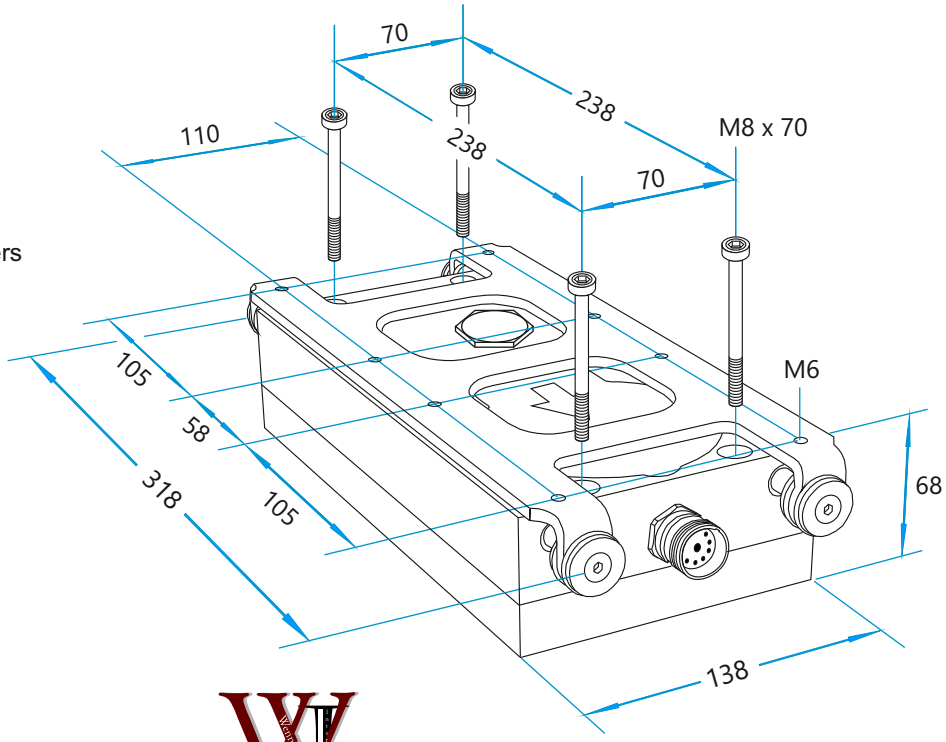

WENNBERG INTERNATIONAL TRADERS LLC
8920 Kelly Lake Dr. Clarkston, Michigan, 48348 USA
Phone: +1 248-802-2604. Internet: wi@wennintl.com
Web: www.wennintl.com