Conveyor 22®
Clean Electrical Engineering

Made in Sweden

Abmessungen und Lochbildzeichnungen

Alle Maße in Millimetern

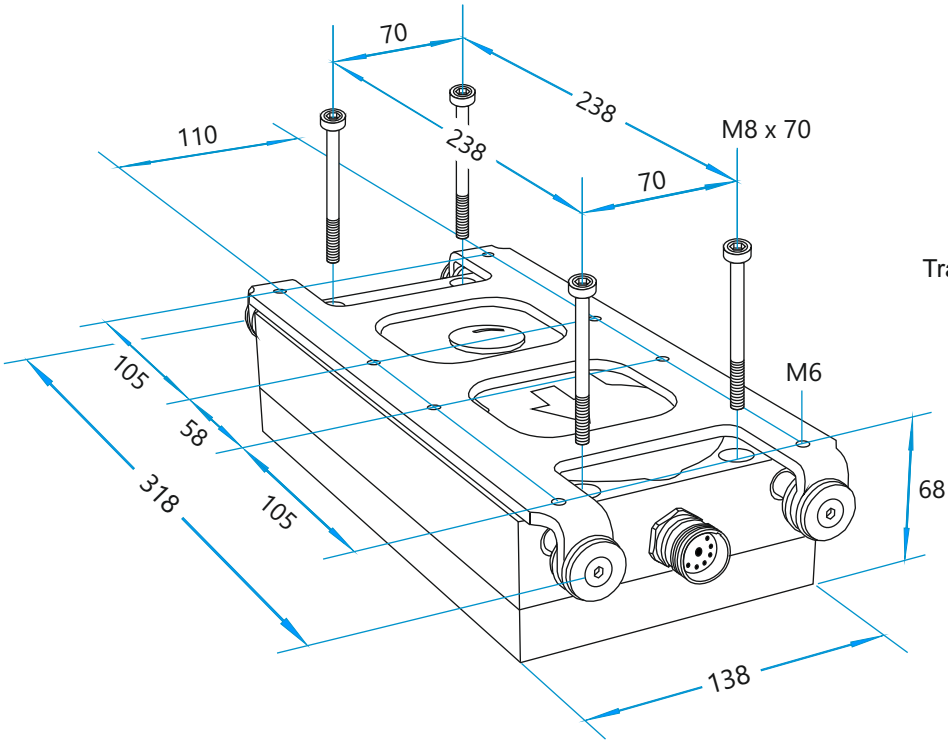

Transporter Black Line 121

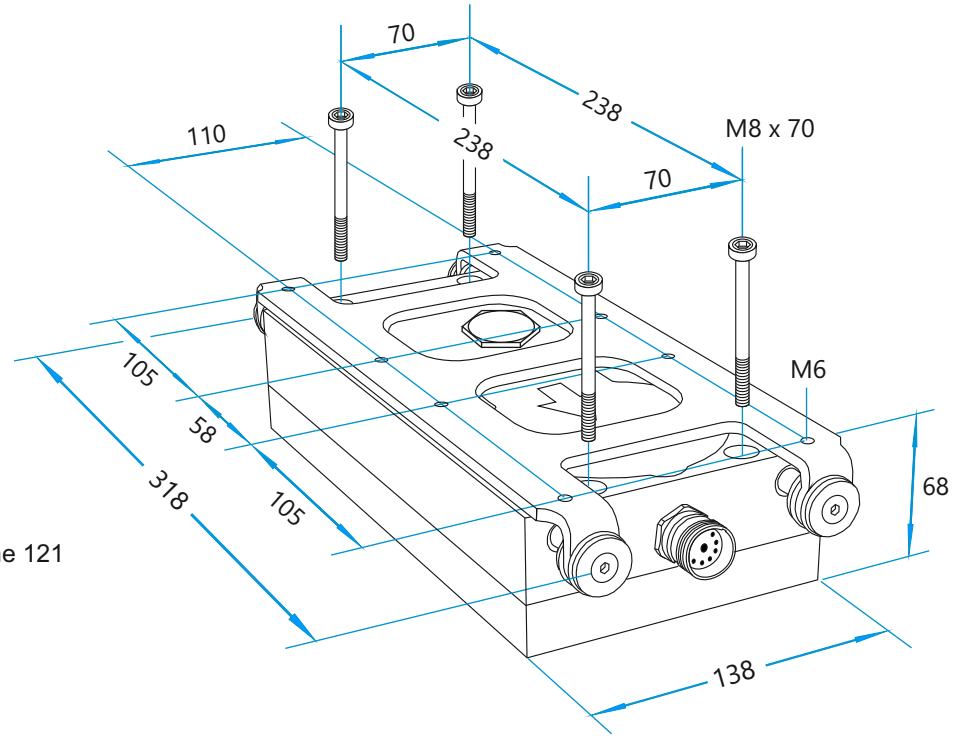

Transporter Clean Line 121

Postadress/Address:
Conveyor 22 AB
Gränumsvägen 390
293 93 Olofström, Sweden

Telefon/Phone:
+46 (0)454-432 21

E-mail:
kontakt@conveyor22.se

Internet:
www.conveyor22.se

Org nr/VAT no:
556881-0393
SE556881039301

© Conveyor 22 AB 2018-02